CO2037 – Electrical Electronic Circuits

Basic Concepts & Resistive Circuits

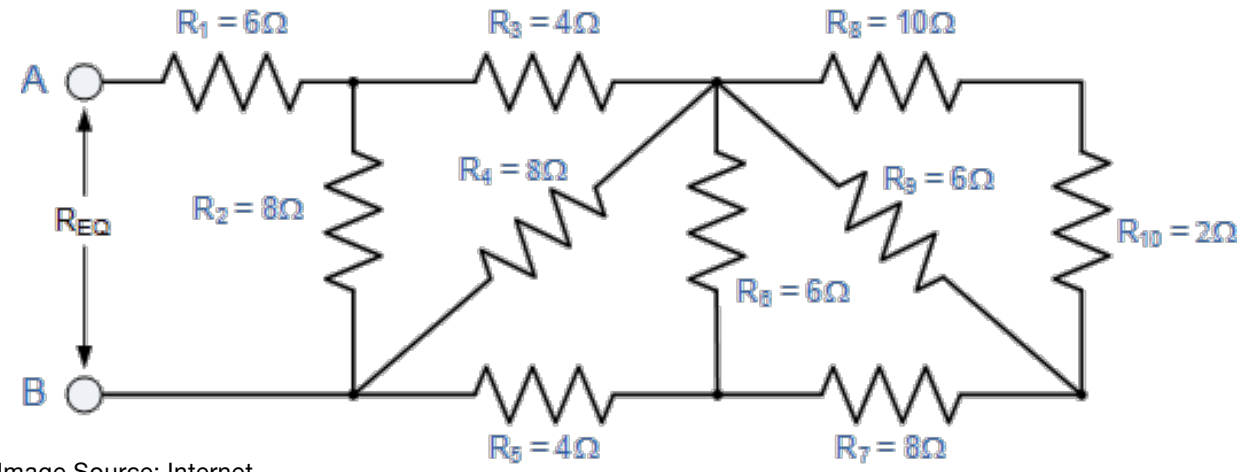

Image Source: Internet

Contents (1)

- Electric Circuit
- Current
- Voltage
- Power
- Circuit elements
- Short and Open circuit

What is an Electric Circuit?

- In electrical engineering, we are usually interested in transferring energy or communicating signals from one point to another.

  To do this, we often require an interconnection of electrical components.

"An electric circuit is an interconnection of electrical components."

- Typical circuit or electrical components that we will see

  Batteries or voltage sources, current sources, resistors, switches, capacitors, inductors, diodes, transistors, operational amplifiers, ...

What is an Electric Circuit?

- According to Merriam-Webster Dictionary:

  The complete path of an electric current including usually the source of electric energy.

- According to Encyclopedia Britannica:

  Path that transmits electric current.

- A circuit includes a **battery** or a **generator** that gives energy to the charged particles; **devices** that use current, such as lamps, motors, or electronic computers; and **connecting wires** or **transmission lines**.

- Two basic laws that describe the performance of electric circuits are **Ohm's law** and **Kirchhoff's circuit rules."**

A Simple Circuit

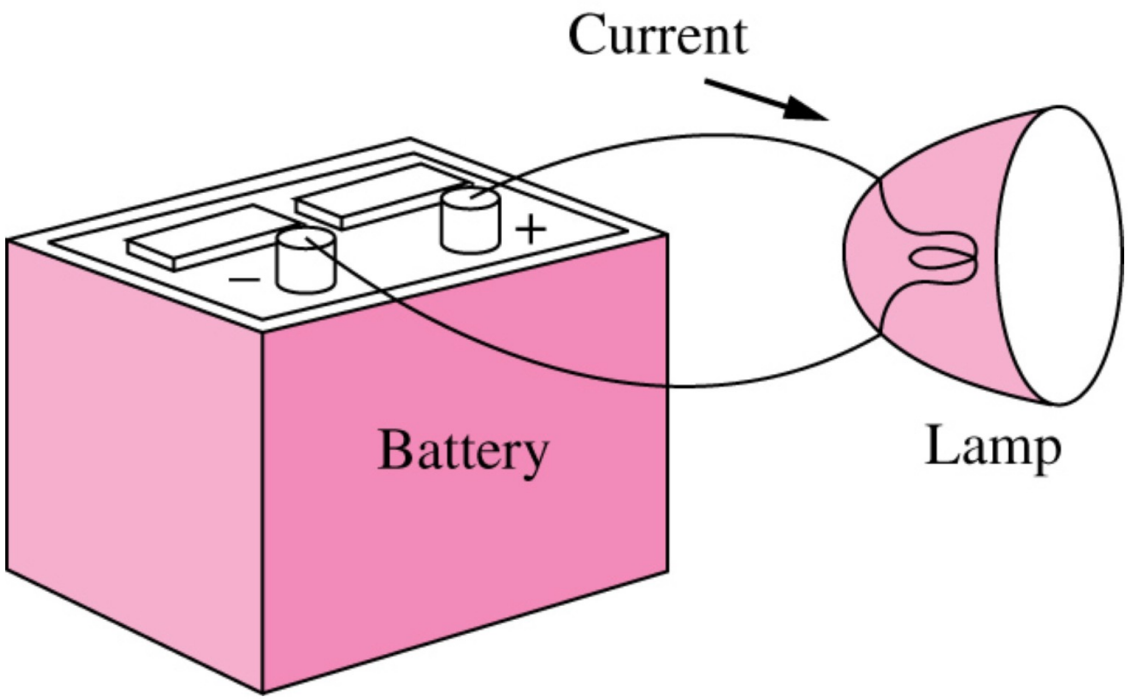

A More Complicatied Circuit

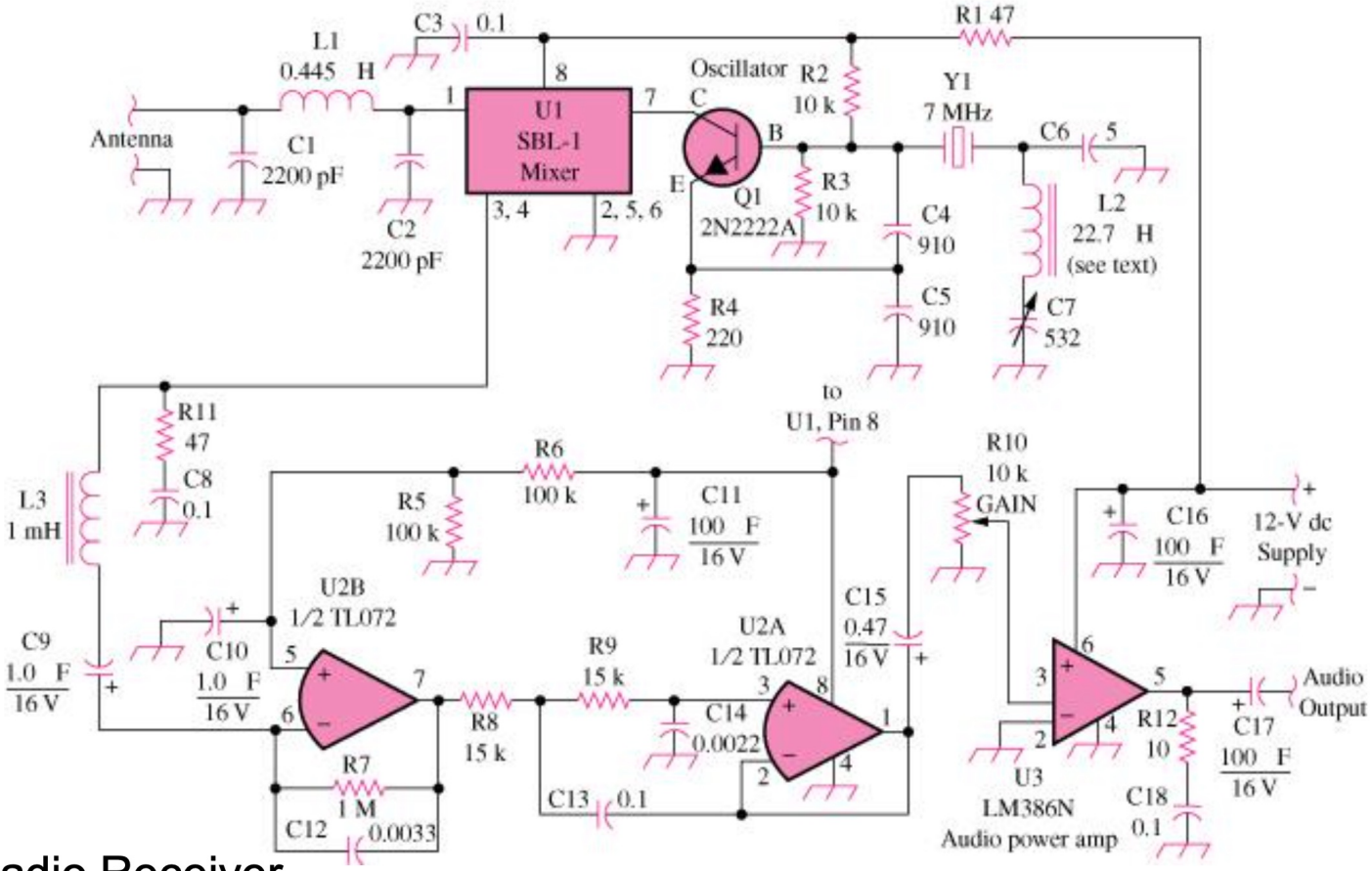

A Radio Receiver

Electric Current

- Originally scientists (in particular Benjamin Franklin (1706-1790) an American scientist and inventor) thought that current is only due to the movement of positive charges.

- Thus the direction of the current was considered **the direction of movement of positive charges**.

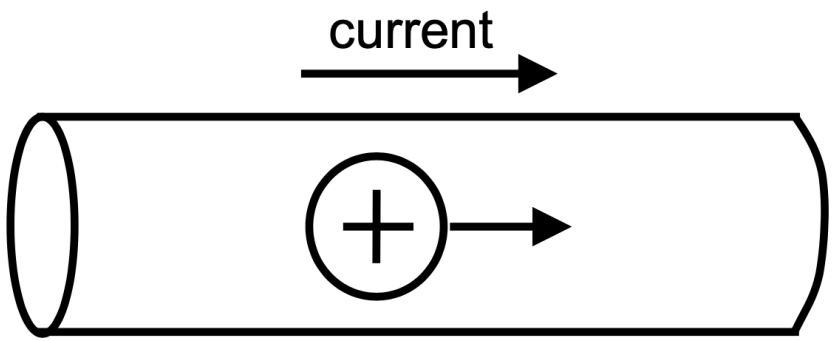

Two Important Types of Current

- Direct current (DC) is a current that remains constant with time.
- Alternating current (AC) is a current that varies sinusoidally with time.

(a)

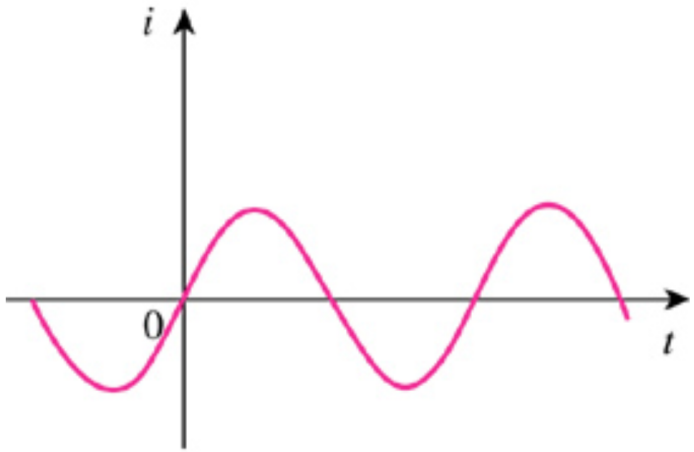

(b)

Voltage

- Voltage (electromotive force, or potential) is the energy required to move a unit charge through a circuit element, and is measured in Volts (Alessandro Antonio Volta (1745-1827) an Italian Physicist).

$$v = \frac{dW}{dq}$$

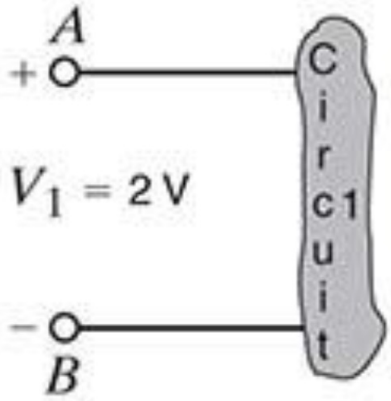

- Similar to electric current, there are two important types of voltage: DC and AC

- "Voltage between two points in a circuit is the difference in energy level of a unit charge located at each of the two points.

Voltage Polarity

- The plus (+) and minus (-) sign are used to define voltage polarity.

- The assumption is that the potential of the terminal with (+) polarity is higher than the potential of the terminal with (-) polarity by the amount of voltage drop.

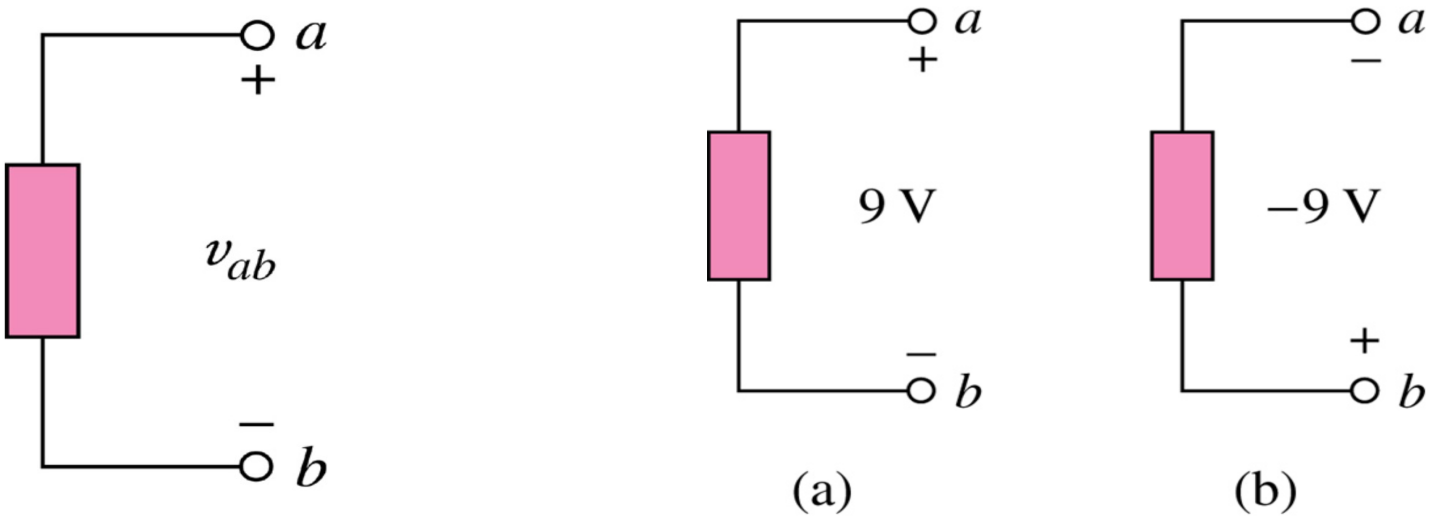

Power

- The rate of change of (expending or absorbing) energy per unit time, measured in Watts (James Watt (1736-1819) a Scottish inventor and mechanical engineer)

$$p = \frac{dW}{dt} = \frac{dW}{dq} \times \frac{dq}{dt} = vi$$

A Classification of Circuit Components

One common classification for circuit components is to group them in two major groups:

- **Passive** components or passive elements
  - Components or elements that **absorb power**.
  - Example: resistors, capacitors, and inductors

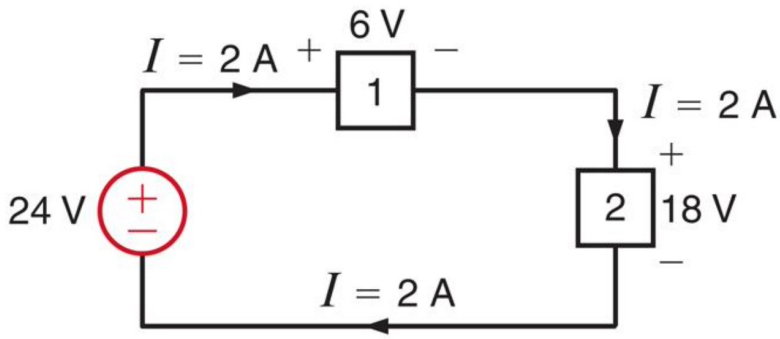

- **Active** components or active elements
  - Components that are not passive! that is, components that **deliver power.**
  - Example: current or voltage sources

Short and Open Circuit

- A device with zero resistance is called short circuit and a device with zero conductance (i.e., infinite resistance) is called open- circuit.

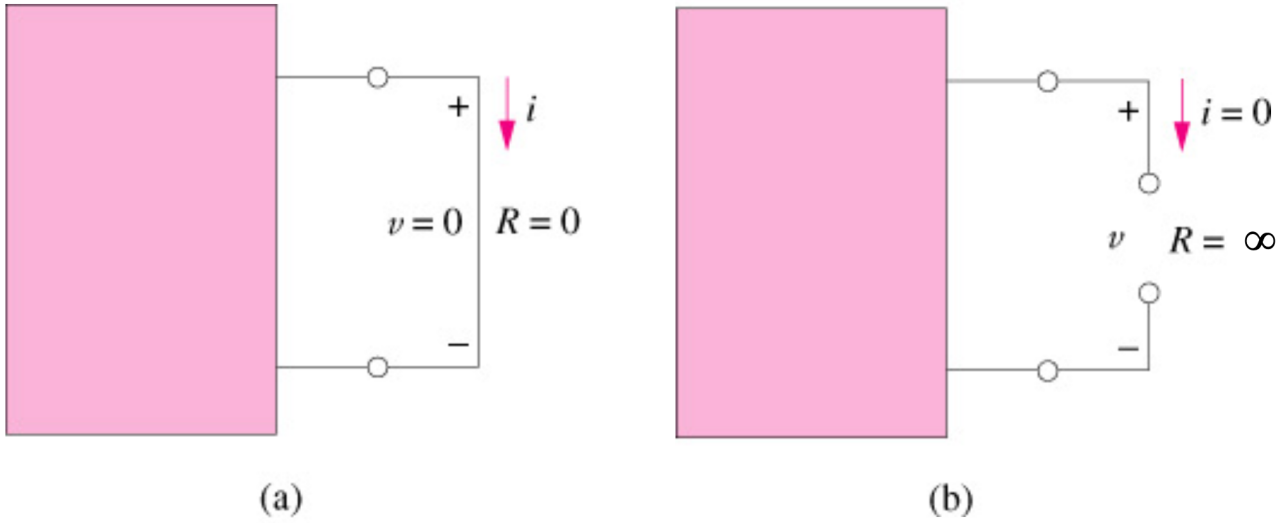

Contents (2)

- Node
- Branches
- Kirchhoff's Current Law (KCL)
- Kirchhoff's Voltage Law (KVL)
- Wye-Delta Transformation

Terminology

- A true node (or **node** for short) is the point of connection of three or more circuit elements. (The node includes the interconnection wires.)
- A **binary node** (or **b-node** for short) has only two components connected to it.

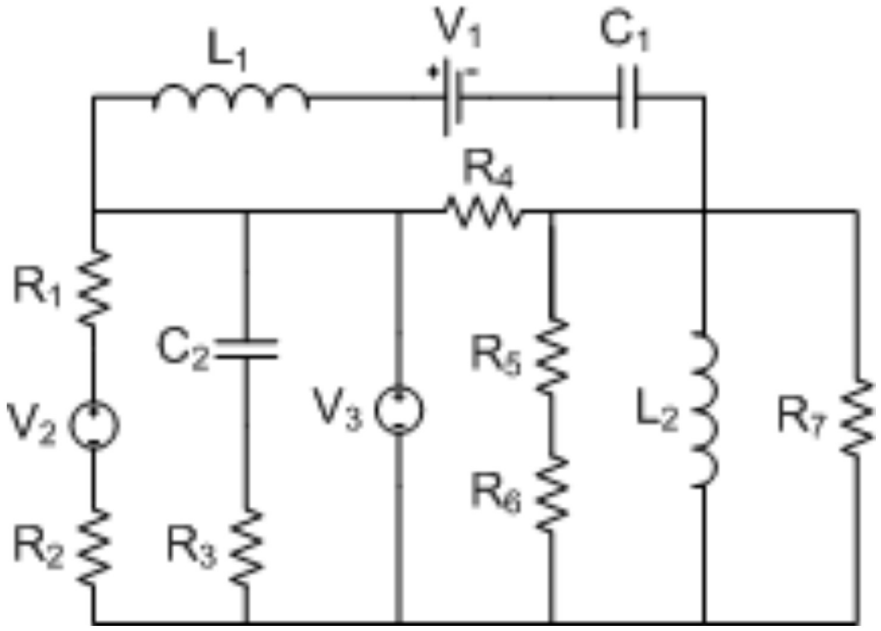

Terminology

- A **loop** is any closed path in the circuit that does not cross any true node but once.
- A **window pane loop** is a loop that does not contain any other loops inside it.
- An **independent loop** is a loop that contains at least one branch that is not part of any other independent loop.

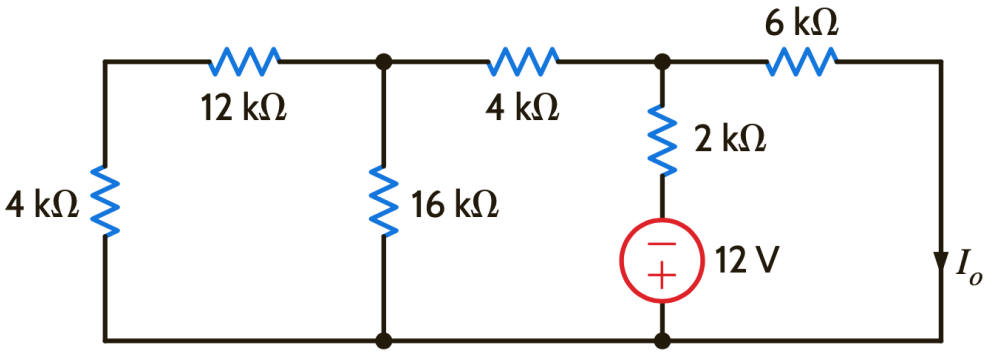

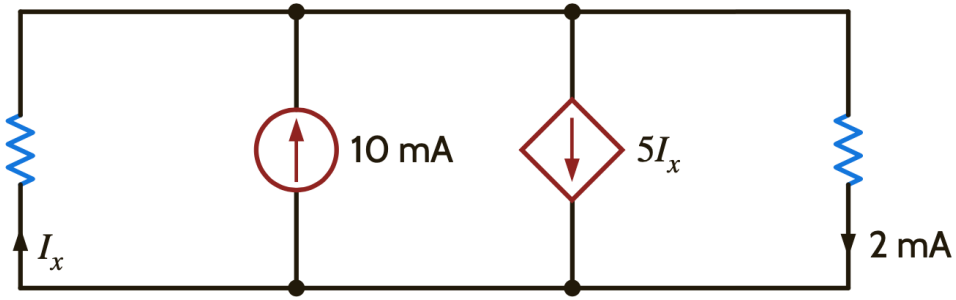

Kirchhoff's Current Law (KCL)

- Gustav Robert Kirchhoff (1824-1887), a German physicist, stated two basic laws concerning the relationship between the currents and voltages in an electrical circuit.

- KCL: The algebraic sum of the currents entering a node (or a closed boundary) is zero.

- The current entering a node may be regarded as positive while the currents leaving the node may be taken as negative or vice versa.

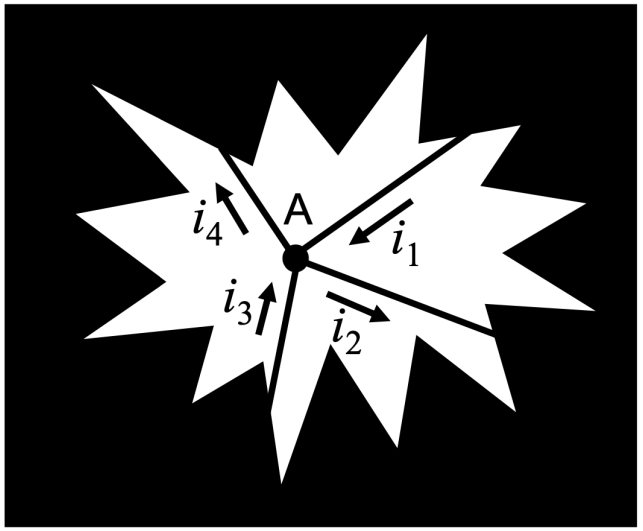

Black box circuit

$$i_1 - i_2 + i_3 - i_4 = 0$$

Kirchhoff's Current Law (KCL)

- Alternative statement of KCL

  The sum of the currents entering a node is equal to the sum of the currents leaving that node.

$$\sum i_{in} = \sum i_{out}$$

$i_1 = 20 + 60$

$i_1 + i_6 = i_4$

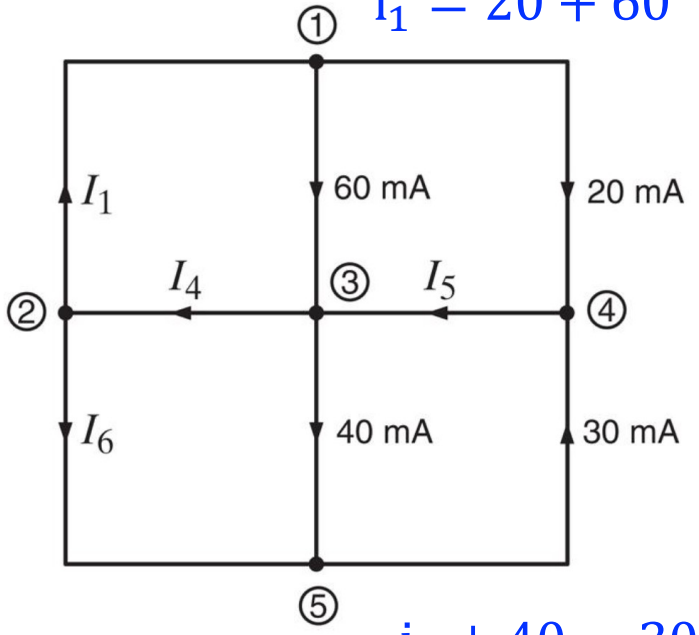

$20 + 30 = i_5$

$i_6 + 40 = 30$

Kirchhoff's Voltage Law (KVL)

- **KVL**: The algebraic sum of the voltage drops around any closed path (or loop) is zero at any instance of time.

  Alternative statement of KVL: Sum of voltage drops=Sum of voltage rises

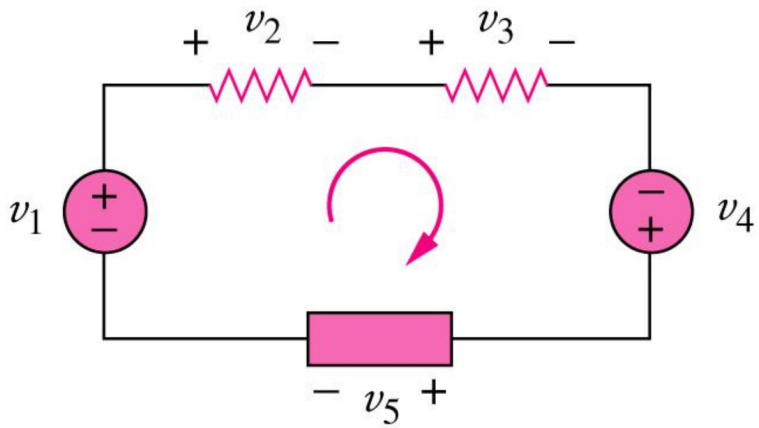

$$-v_1 + v_2 + v_3 - v_4 + v_5 = 0$$

$$v_2 + v_3 + v_5 = v_1 + v_4$$

Some Interesting Implications of KCL and KVL

- A series connection of two different current sources is impossible. Why?

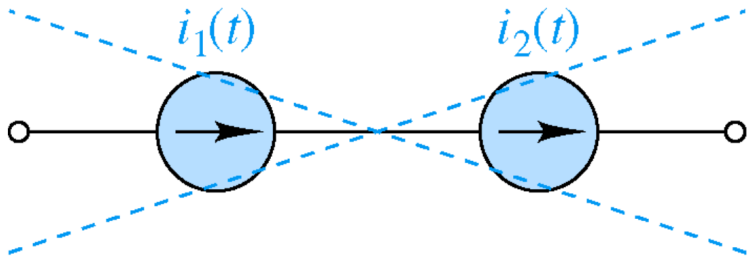

- A parallel connection of two different voltage sources is impossible. Why?

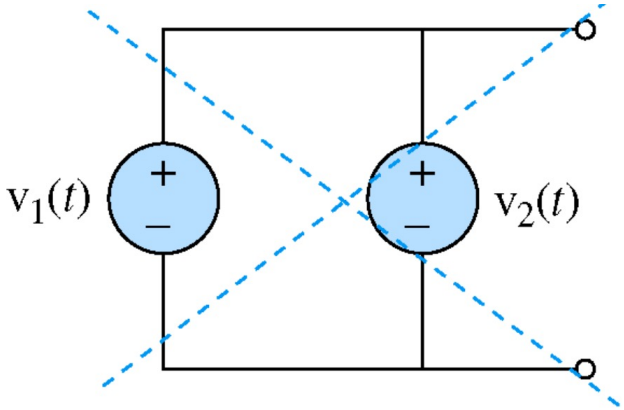

Wye-Delta Transformations

- In some circuits the resistors are neither in series nor in parallel.
  How can we combine the resistors R1 through R6?

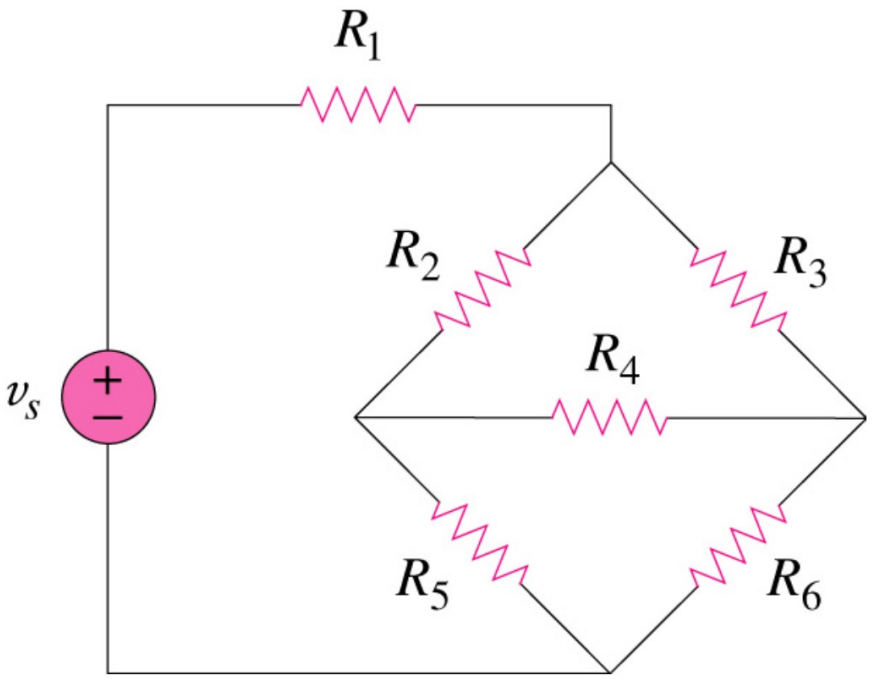

Wye and Delta Networks

- A wye (Y) or tee (T) network is a three-terminal network with the following general form:

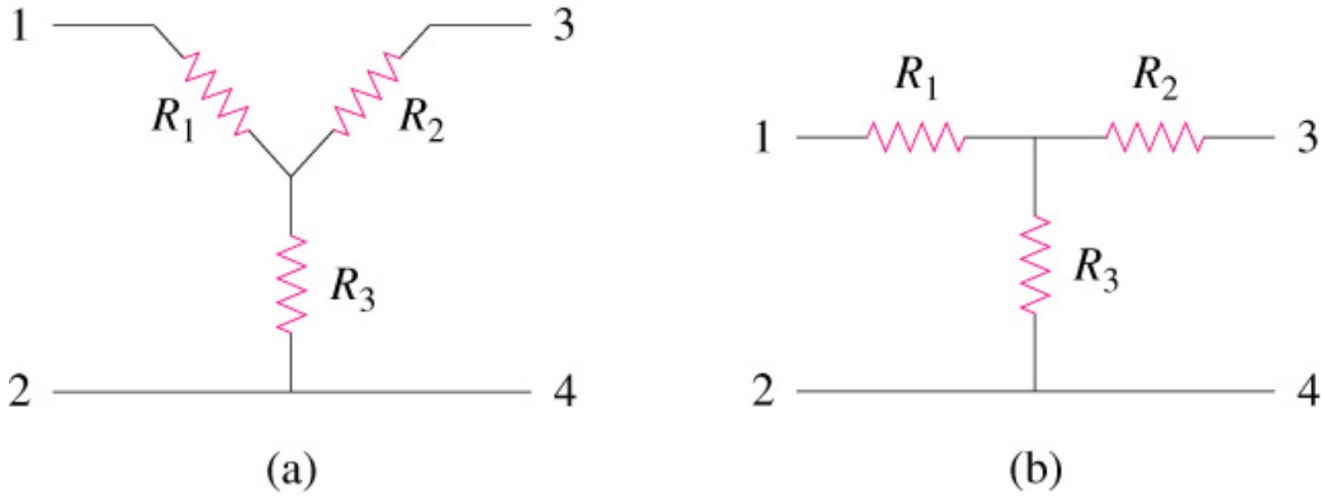

Wye and Delta Networks

- The delta (Δ) or pi (π) network has the following general form:

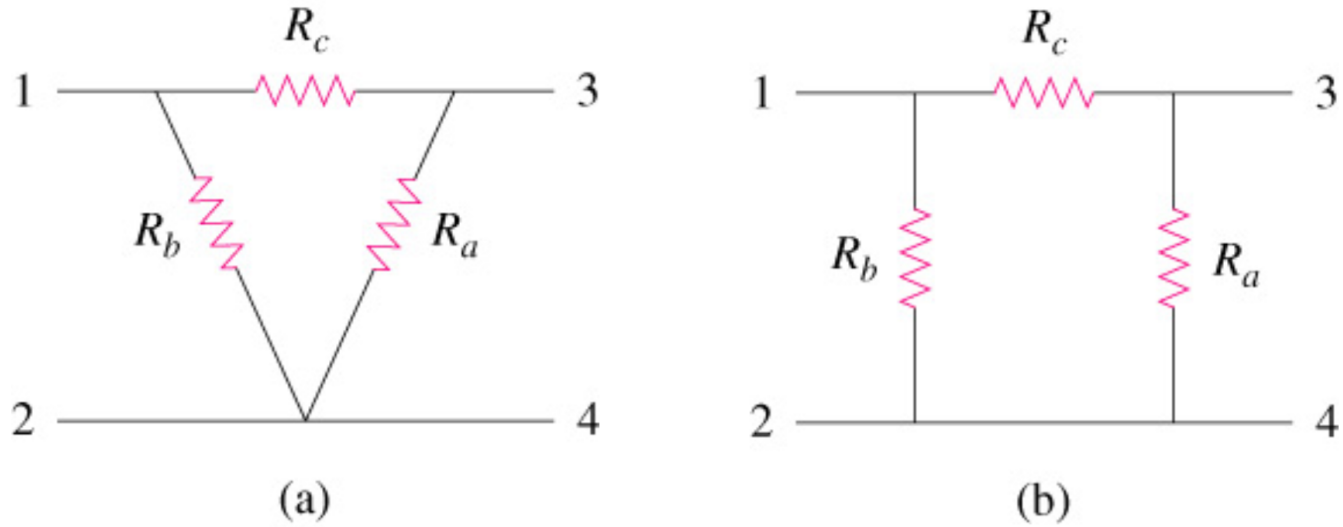

Delta-Wye Conversion

- A useful technique that can be used to simply many such circuits is transformation from wye (Y) to delta (Δ) network and vice versa.
- Let's superimpose a wye network on the existing delta network and try to find the equivalent resistances in the wye network

$$R_1 = \frac{R_b R_c}{R_a + R_b + R_c}$$

$$R_2 = \frac{R_c R_a}{R_a + R_b + R_c}$$

$$R_3 = \frac{R_a R_b}{R_a + R_b + R_c}$$

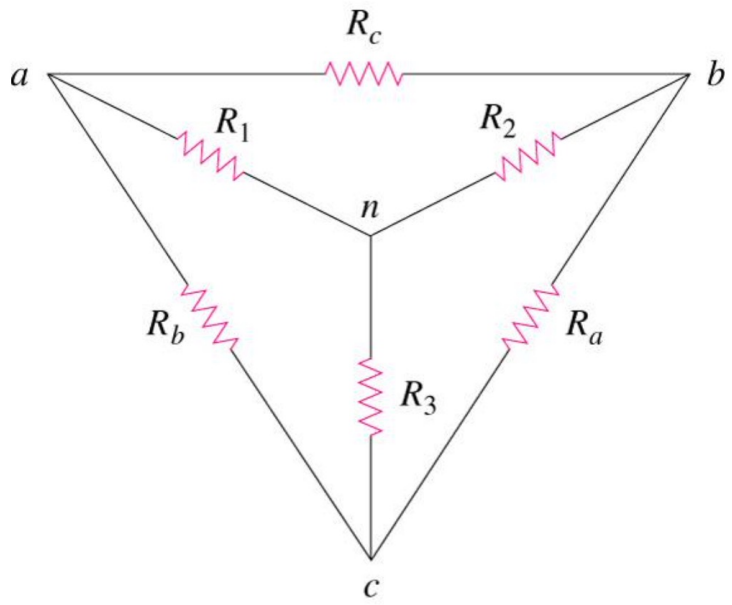

$$R_a = \frac{R_1R_2 + R_2R_3 + R_3R_1}{R_1}$$

$$R_b = \frac{R_1R_2 + R_2R_3 + R_3R_1}{R_2}$$

$$R_c = \frac{R_1R_2 + R_2R_3 + R_3R_1}{R_3}$$

Delta-Wye Conversion
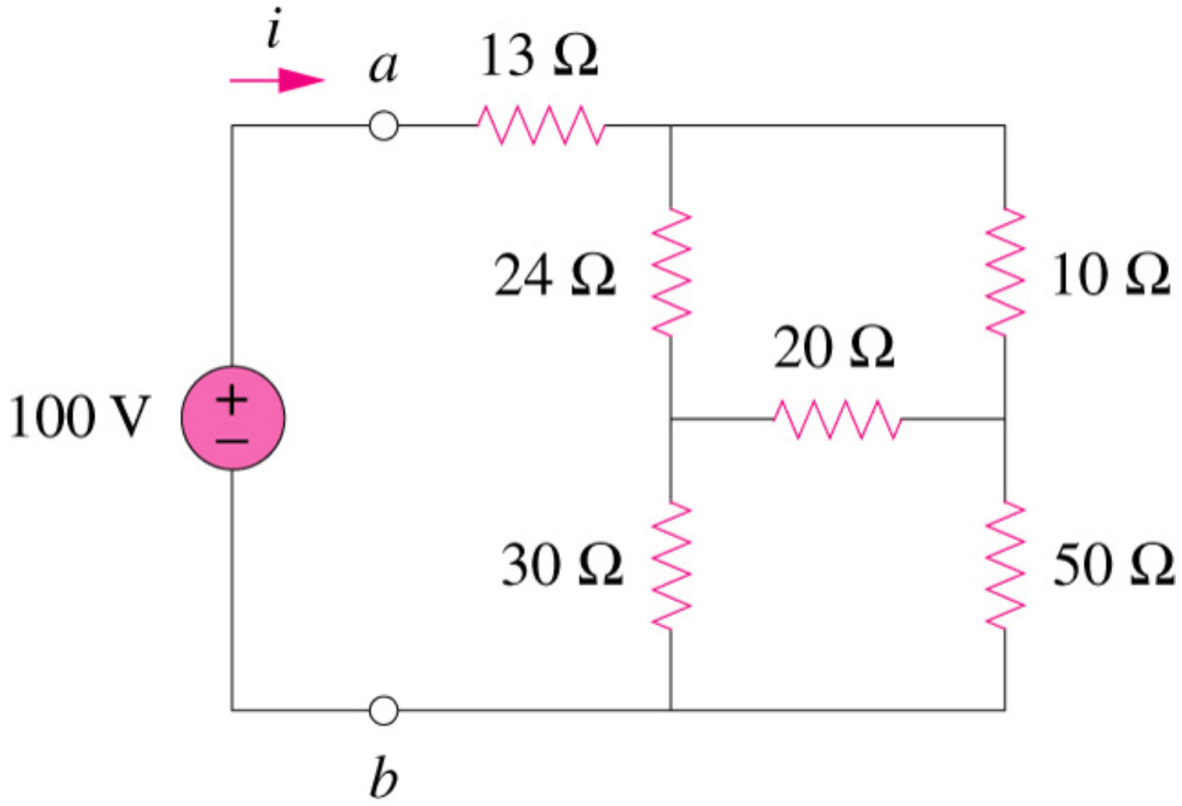
- Example